TITLE: CABLE TRAY ROUTING LAYOUT

DWG NO TCE.7504A-818-CT-3101

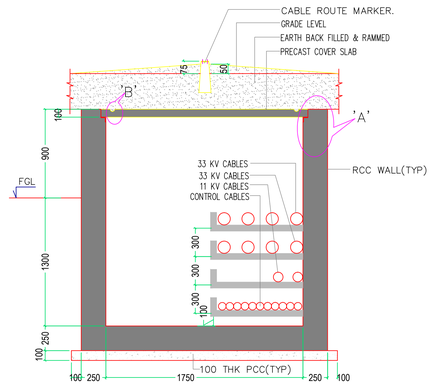

SECTION "A–A"

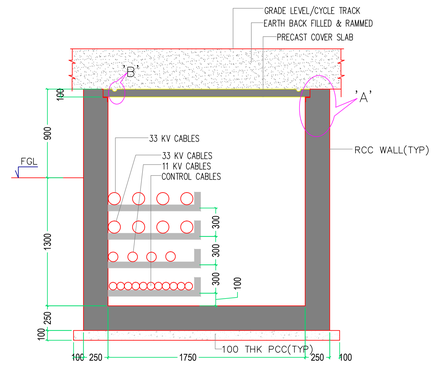

SECTION "B–B, C–C, D–D"

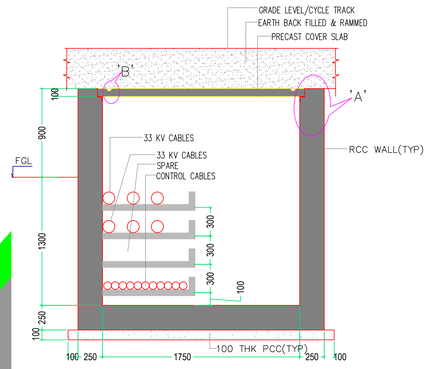

SECTION "E–E"

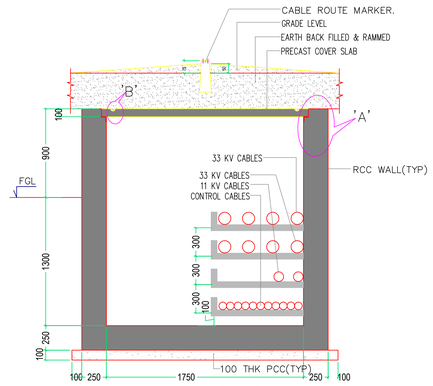

SECTION "F–F"

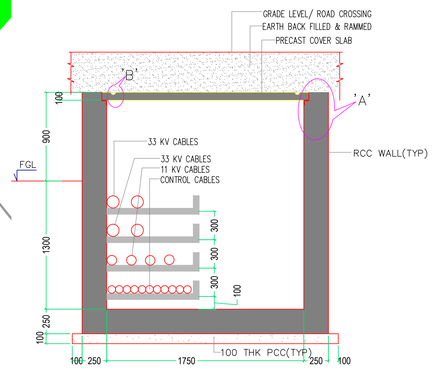

SECTION "G–G"

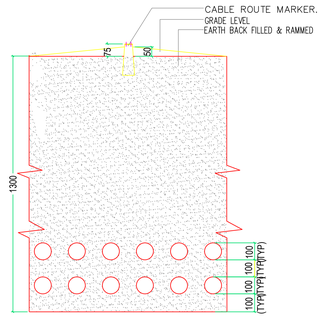

TYP. SECTION "H–H"

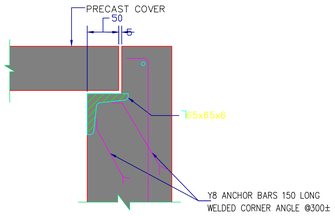

DETAIL 'A'

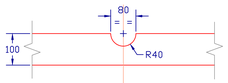

DETAIL B

ANNEXURE-6

LEGEND

- CABLES
- CABLES IN 150DIA. HUME PIPE.

NOTES:

1. ALL DIMENSIONS ARE IN MM AND ELEVATIONS ARE IN METERS.
2. SUITABLE SIZES OF HUME PIPE SLEEVES SHALL BE PROVIDED WHERE CABLE TRENCH CROSSES BEAMS/ RCC WALLS.
3. ASSEMBLY OF CABLE CARRIER STRUCTURE SHALL BE PREFABRICATED, SUPPLIED, ERECTED AND PAINTED BY THE ELECTRICAL CONTRACTOR.
4. EARTHING STEEL CONDUCTOR SHALL BE WELDED TO CABLE CARRIER STRUCTURE BEFORE INSTALLATION OF CABLES. EARTHING CONDUCTOR SHALL BE SUPPLIED, ERECTED AND WELDED BY THE ELECTRICAL CONTRACTOR.
5. MINIMUM SIZE OF EARTHING CONDUCTOR SHALL BE 50 X 10MM GI FLAT UNLESS NOTED. ALL EXPOSED STEEL INSIDE THE TRENCH SHALL BE EFFECTIVELY BONDED TO EARTHING SYSTEM.
6. INTERNAL DIA. OF HUME/PVC PIPE IS SHOWN.

ENGINEERING REFERENCE DRAWING:

1. LAYOUT PLAN FOR INTEGRATED INDUSTRIAL TOWNSHIP DADRI
2. BLOCK DIAGRAM FOR INCOMING POWER SUPPLY ARRANGEMENT FOR IIT SUBSTATION DWG. NO.– TCE.7504A-700-AU-3000.
3. SINGLE LINE DIAGRAM FOR 220KV GIS. DWG. NO.– TCE.7504A-700-AU-3002.
4. SINGLE LINE DIAGRAM FOR 33 & 11KV DISTRIBUTION SYSTEM.DWG. NO.– TCE.7504A-700-AU-3003.
5. GA LAYOUT FOR 220/33KV SUB-STATION. DWG.NO.– TCE.7504A-702-GA-3004.
6. TYPICAL ROAD SECTION (80M)– DWG. NO.– TCE.7504A-153-TP-6000.
7. TYPICAL ROAD SECTION (60M)– DWG. NO.– TCE.7504A-153-TP-6001.
8. TYPICAL ROAD SECTION (45M)– DWG. NO.– TCE.7504A-153-TP-6002.
9. TYPICAL ROAD SECTION (30M)– DWG. NO.– TCE.7504A-153-TP-6003.

CONSTRUCTION REFERENCE DRAWING:

NIL.

PRELIMINARY DESIGN

CONSULTANCY SERVICES FOR MASTER PLAN, PRELIMINARY DESIGN REPORT ALONG WITH TENDER DOCUMENTS FOR DEVELOPMENT OF TRUNK INFRASTRUCTURE FOR INTEGRATED INDUSTRIAL TOWNSHIP

INTEGRATED INDUSTRIAL TOWNSHIP COMPANY SPV OF GNIDA AND DMICDC

DELHI–MUMBAI INDUSTRIAL CORRIDOR DEVELOPMENT CORPORATION (DMICDC)

CABLE TRAY ROUTING LAYOUT

FOR RO ISSUE ONLY		
CLEARED		
DEPT	SIGNATURE	DATE
CHEM		
CIVIL		
ELEC		
I&C		
MECH		

ISSUE	REVISIONS	DRN	CLEARED CHEM	CIVIL	ELEC	I&C	MECH	APPD	DATE

ISSUE	REVISIONS	DRN	CLEARED CHEM	CIVIL	ELEC	I&C	MECH	APPD	DATE

FILE NAME : 7504–CT3101P2

"P" (PRELIMINARY) ISSUES ARE NOT TO BE USED FOR CONSTRUCTION / FABRICATION BUT ARE ISSUED FOR LIMITED PURPOSES ONLY AS INDICATED IN THE SMALL BLOCK AT THE TOP RIGHT HAND CORNER OF THE TITLE BLOCK.

CONSTRUCTION / FABRICATION WORK IS PERMITTED ON "R" (RELEASED) ISSUES ONLY.

INFORMATION CONTAINED WITHIN "HOLD" IS NOT RELEASED FOR CONSTRUCTION/ FABRICATION. FIELD MUST GET DESIGN OFFICE TO CLEAR "HOLDS" IN TIME BEFORE PROCEEDING WITH ANY CONSTRUCTION/FABRICATION WORK RELATED TO "HOLDS".

TATA CONSULTING ENGINEERS LIMITED
MUMBAI

SCALE: NA	APPROVED		DATE (RO ISSUE)
DEL.CENTRE–DISC: EL	VVB		DATE (CURRENT ISSUE) AUG–2015
DRN: BSN	PKA	TG	
CHD: PT	DWG NO TCE.7504A–818–CT–3101		ISSUE P2

SIZE–A1

FILE NAME: F–041–Rev–R5.dwg

TCE FORM NO. 041 R5